Chicago Pneumatic

CP875 & CP876

Mini Angle Die Grinder & Die Grinder

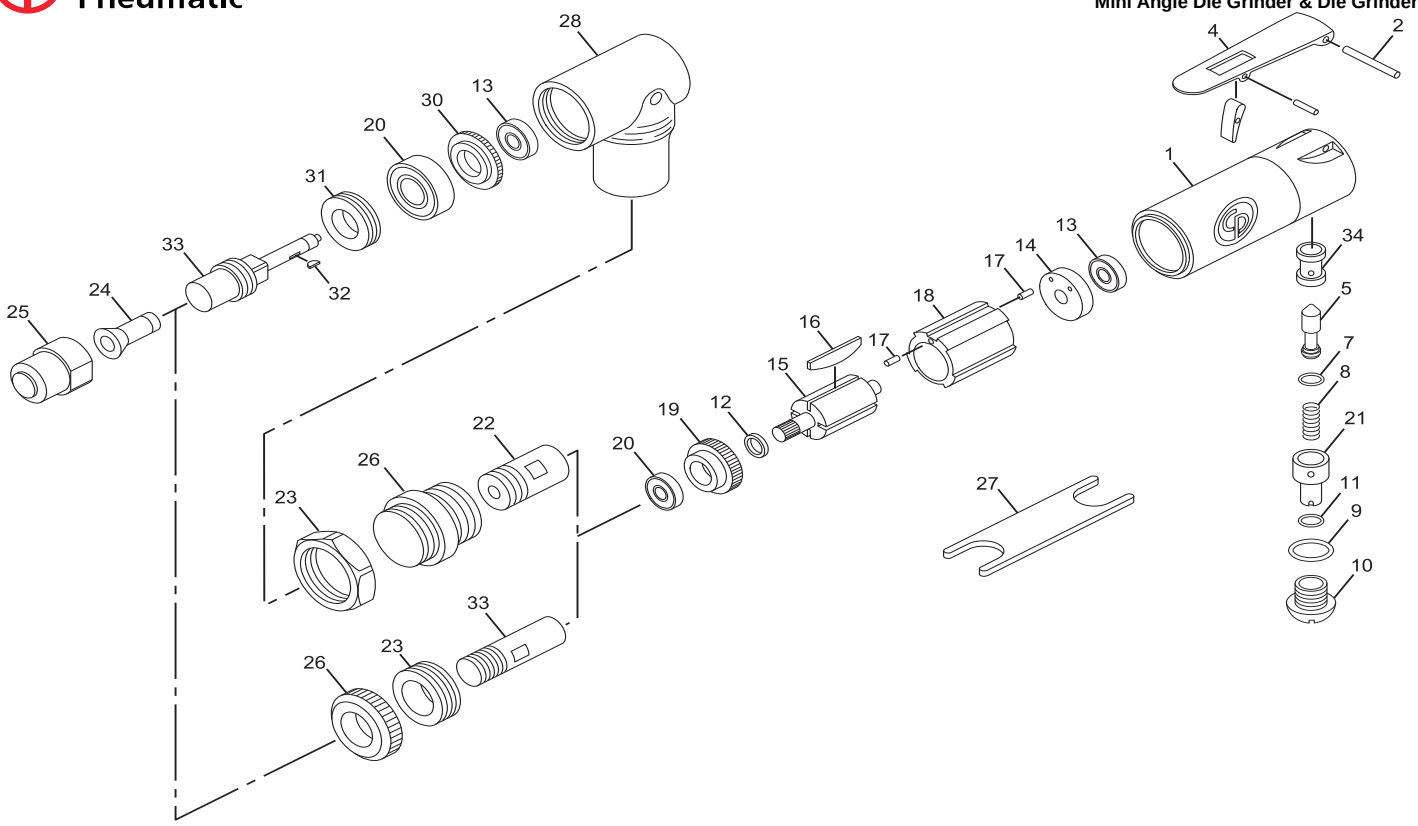

Item	Part No	Description		Qty.
2	CA144787	Pin-Throttle		1
4	CA144788	Lever-Throttle (Incl: Lockout)		1
23	CA144803	Nut-Clamp	CP875	1
	CA144856	Nut-Clamp	CP876	1
24	C138727	Collet (1/4 in.)		1
	C139289	Collet (6 mm)		1
25	C138728	Nut-Collet		1
26	CA144806	Cap-Housing	CP875	1
	CA144857	Cap-Housing	CP876	1
27	CA144807	Wrench-Spanner		2
A	**CA145219**	**Motor housing assembly**		
1	CA144786	Housing-Motor (Incl: Index No.34)		1
34	CA147745	Bushing-Throttle Valve		1
5	CA144789	Valve-Throttle		1
7	CA144842	O-Ring		1
8	CA144790	Spring-Throttle Valve		1
9	CA144843	O-Ring		1
10	CA144791	Plug-Throttle Valve		1
11	CA144844	O-Ring		1
21	CA144801	Regulator-Air		1
B	**CA145218**	**Gear housing assembly**	**CP875**	
13	CA144793	Bearing-Ball		1
20	CA144800	Bearing-Ball		1
28	CA144808	Head-Housing. (Incl: Grease Fitting)		1
30	CA144809	Gear-Bevel		1
31	CA144810	Ring-Lock		1
32	CA144811	Key		1
33	CA144812	Spindle	CP875	1

Item	Part No	Description		Qty.
C1		**Motor assembly**	**CP875**	
12	CA144792	Collar-Rotor		1
13	CA144793	Bearing-Ball		1
14	CA144794	Plate-Rear End		1
15	CA144795	Rotor		1
16	CA144796	Blade Set-Rotor (4)		1
17	CA144797	Pin-Roll		2
18	CA144798	Liner		1
19	CA144799	Plate-Front End	CP875	1
20	CA144800	Bearing-Ball		1
22	CA144802	Pinion	CP875	1
C2	**CA145315**	**Motor assembly**	**CP876**	
12	CA144792	Collar-Rotor		1
13	CA144793	Bearing-Ball		1
14	CA144794	Plate-Rear End		1
15	CA144795	Rotor		1
16	CA144796	Blade Set-Rotor (4)		1
17	CA144797	Pin-Roll		2
18	CA144798	Liner		1
19	CA144855	Plate-Front End	CP876	1
20	CA144800	Bearing-Ball		1
33	CA144858	Spindle	CP876	1

8940171826	OPERATOR'S MANUAL
6159948710	SAFETY INSTRUCTIONS

Recommended Accessories